SB-4242NEO | SHOWER BASE

FULL CURB | CENTER DRAIN

Solid Surface Solutions

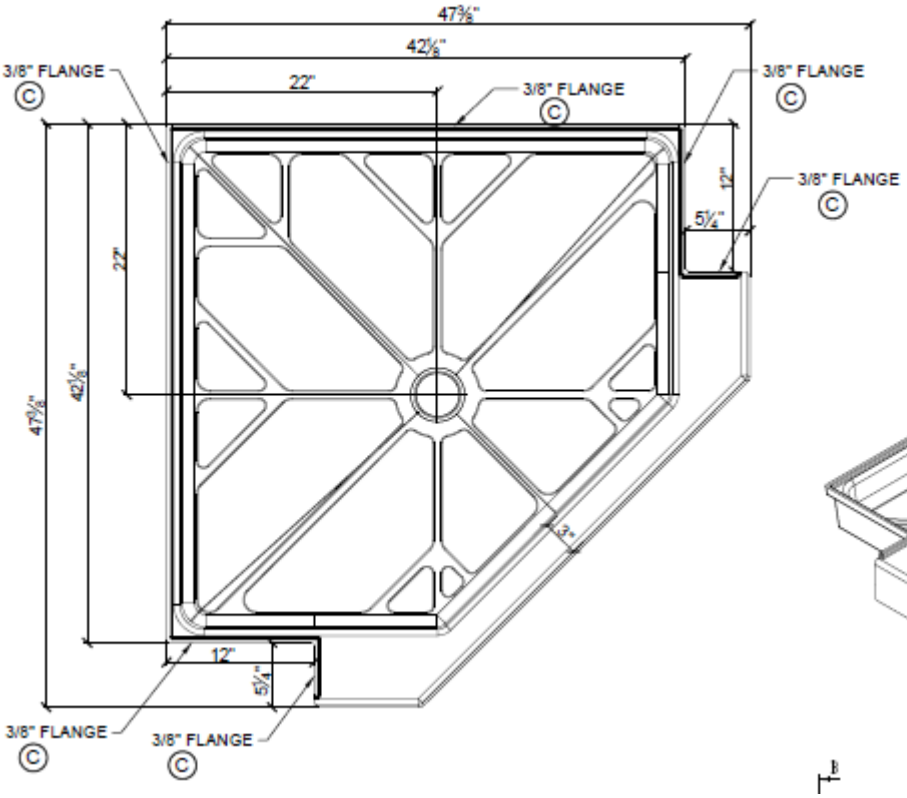

PRODUCTION NOTE:
1. FLANGE TO MEASURED @ MULTIPLE POINTS TO ENSURE TOLERANCE COMPLIANCE

PRODUCTION NOTE:
Ⓒ = CRITICAL TOLERANCE +/- 0.050"

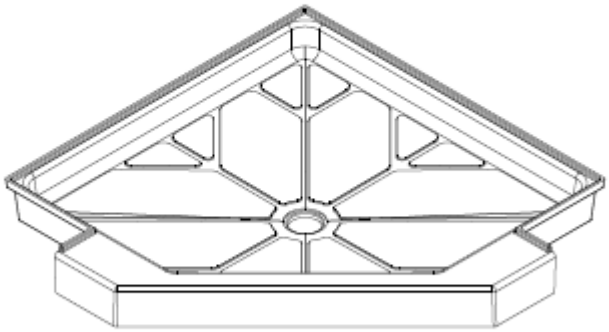

DESCRIPTION:

Interior Dimensions: 36” x 36”

Curb Type: Full Curb

Drain: Center Drain

Not ADA compliant

Textured Base—available in the solid and natural collection

**Not available in other colors

Vendura Industries, LLC | 1202 Femrite Drive | Madison, WI 53716 | 608.223.9555 | mkartman@vendura.com
www.vendura.com